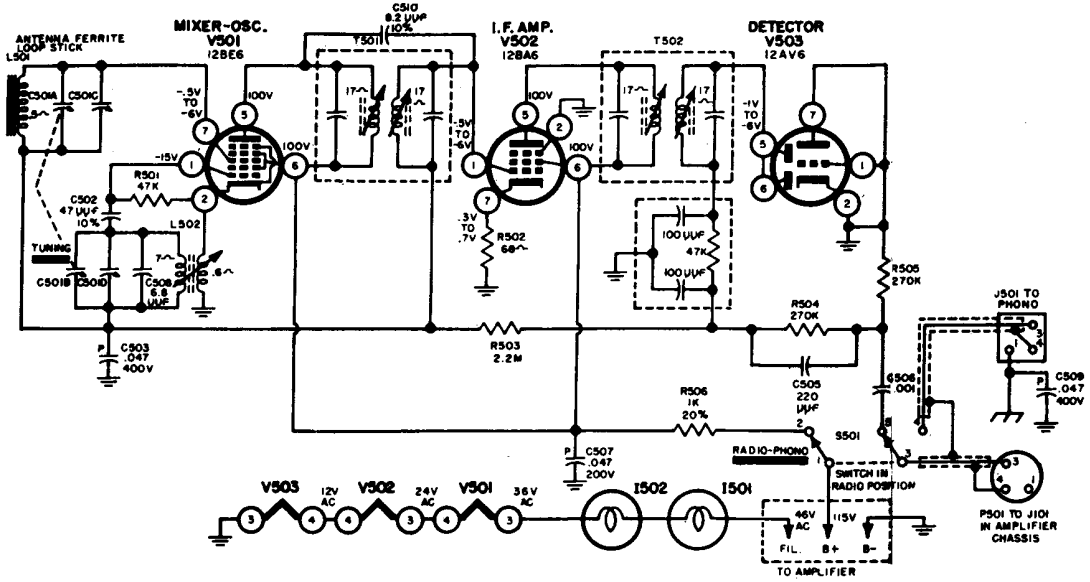

Resistance Measurements

All Readings to B–

	1	2	3	4	5	6	7	8	9
V101	INF	INF	8	0	INF	150K-2.2M	3.9K		
V102	INF	0-1M	2.2K	8	20	INF	33K	2.2K	NC
V103	82	420K	20	65	420K	INF	INF		
V104	82	470K	65	110	470K	INF	INF		
V501	47K	8	35	25	INF	INF	2.7M		
V502	2.7M	0	25	13	INF	INF	68		
V503	0	0	0	13	580K	580K	0		

The above resistance readings were taken with an RCA model WV97A VTVM. All readings are in ohms, K = 1000, M = 1 million

NOTE: RA-379 measurements of V101 to V104 were taken with the Radio-Phono switch in the Phono position. V501 to V503 were measured with the switch in the Radio position.

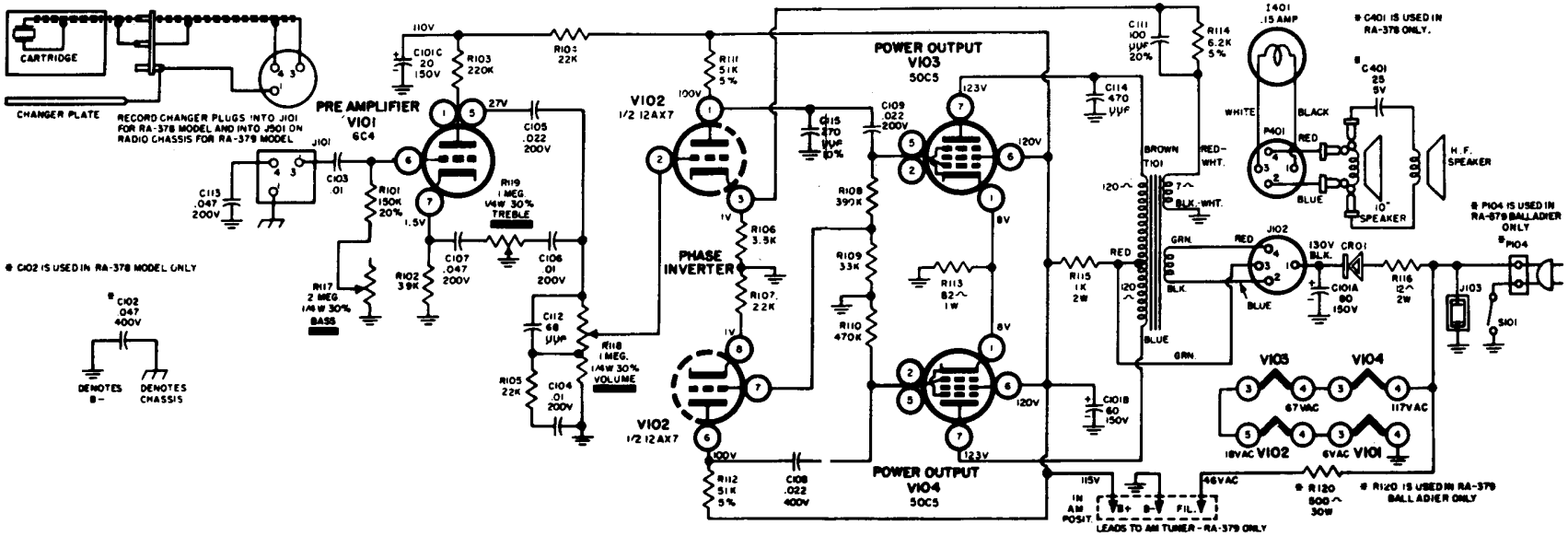

DUMONT - Radiofonografo mod. RA-378/379. Gamma onde medie. Media frequenza 455 kc/s. Nello schema, le resistenze sono indicate con K (mille ohm) e con M (un milione di ohm). Apparecchio di produzione americana. Potenza d'uscita di 12 watt con 1 percento di distorsione. Consumo 70 watt.